WDM over POF – a Chance for Low Cost Optical Ethernet

U. H. P. Fischer (member IEEE)[1], M. Haupt[2], J.-U. Just[3]

[1] Dept. of Automation and Comupter Sciences, University of Applied Studies and Research, Friedrichstr. 57-59, 38855 Wernigerode, Germany
Tel: +49 3943 659105, Fax: +49 3943 659 399, E-mail: ufischerhirchert@hs-harz.de

[2] Dept. of Automation and Comupter Sciences, University of Applied Studies and Research, Friedrichstr. 57-59, 38855 Wernigerode, Germany
Tel: +49 3943 659368, Fax: +49 3943 659 399, E-mail: mhaupt@hs-harz.de

[3] Dept. of Automation and Comupter Sciences, University of Applied Studies and Research, Friedrichstr. 57-59, 38855 Wernigerode, Germany
Tel: +49 3943 659340, Fax: +49 3943 659 399, E-mail: jjust@hs-harz.de

Keywords: WDM, polymer optical fibers, WDM-de/multiplexers, optical communication systems

1. Introduction

As the demand for high-speed digital communication such as data, video, and the broadband internet increases, the required throughput of the modules in communications systems will also increase[1]. Fast transmitter and receiver modules are basic elements of such systems, which should be able to transmit terabits/s of information via fiber. Such technologies in turn rely strongly on advanced opto-electronic technologies, and the progress made in optical multiplexing current transmission systems. Time Division Multiplex[2,3,4] (TDM) and Wavelength Division Multiplex[5,6,7] (WDM) have shown to be the most powerful transmission extension techniques for long-haul during the last decade.

Over the last years, transmission via polymer optical fibers (POF) has developed into the standard transmission technique in the automotive industry[8,9] and in local indoor networks[10]. There are, as it can be seen in fig. 1, many reasonable applications for using POF. The forthcoming public network connection over XDSL has a broad band access up to 100 Mbit/s. The services which can be provided for indoor communication are divided in three parts:

- “A/V Server Network” (communication between e.g. television, hifi-receiver and DVD-player),
- “control server network” (massaging between e.g. refrigerator and stove)
- “data server network” (data exchange between e.g. notebook and printer).

The combination of WDM and POF will broaden the horizon of low cost optical customer premises networks.

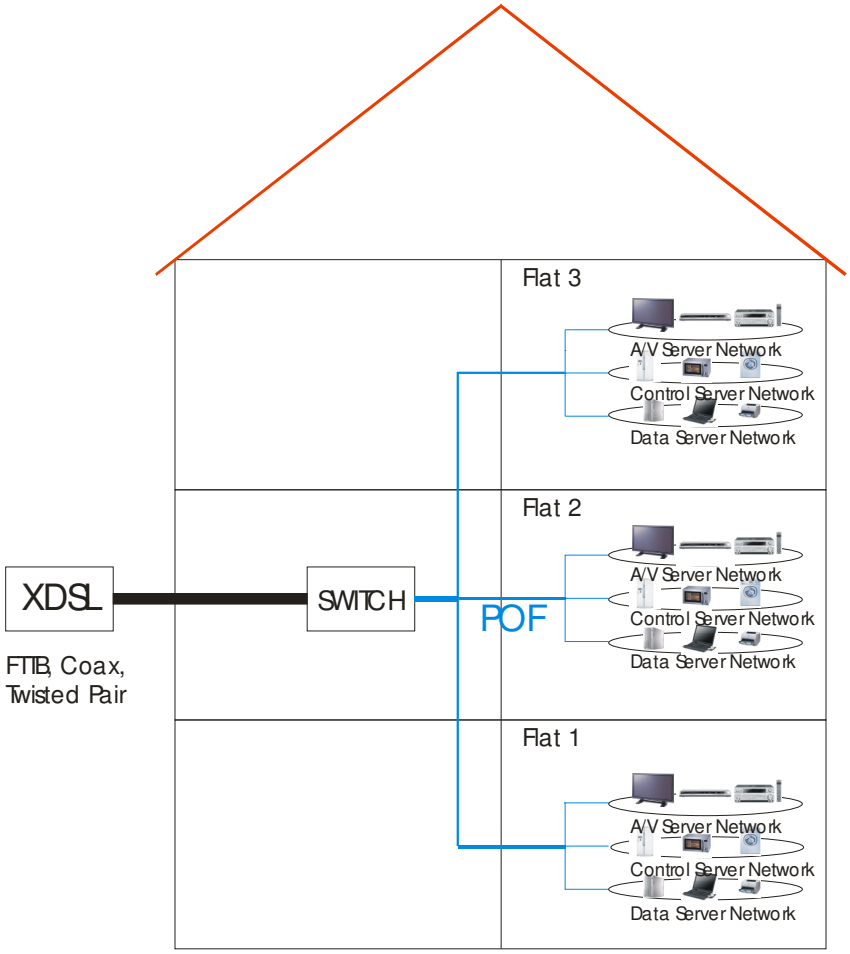

Fig. 1: Local Telecom Infrastructure[11,12]

2. WDM DeMux

Upcoming optical communication systems will take intensive use of the high bandwidth of POF in the optical frequency domain to provide high speed data connection for the fiber-in-the-home network, which is usually Ethernet based. Wavelength division multiplex systems in the infrared communications window have demonstrated that this technique is well suited to expand the capacity of the fibre tremendously. To transpose this WDM-scheme to the POF-window between 350nm to 850nm will provide an opportunity to expand the bandwidth length product of the standard POF fiber from 100Mbit/100m to several Gigabit/100m. The usage of a Coarse WDM scheme of 50nm/channel will provide up to 10 transmitting channels with low individual bitrates, but high amount of 1000Mbit/s overall.

In this paper we present a new concept for the use of WDM-technique in the visible range using polymer optical fibers (POF) as a transmission medium. The low modulation bandwidth of the standard step-index POF of 100MHz/100m can be overcome by the intensive usage of a relatively high number of transmission channels with low modulation rate using the same physical fiber. Low cost optical network elements like multiplexers (MUX) and demultiplexers (DEMUX) must be provided. A patented concept[13,14,15] with first results for low cost MUX/DEMUX will be presented.

A principle sketch of the demuxer is shown in Fig. 2. In the first step, three wavelengths are transmitted over a standard POF. The demuxer has to separate the emitted light in its single monochromatic parts. Therefore, the divergent light beam must be focused on a detection layer to regain the modulated parts of the transported information. To separate the locations of the focus of each wavelength, a high dispersive prism is used.

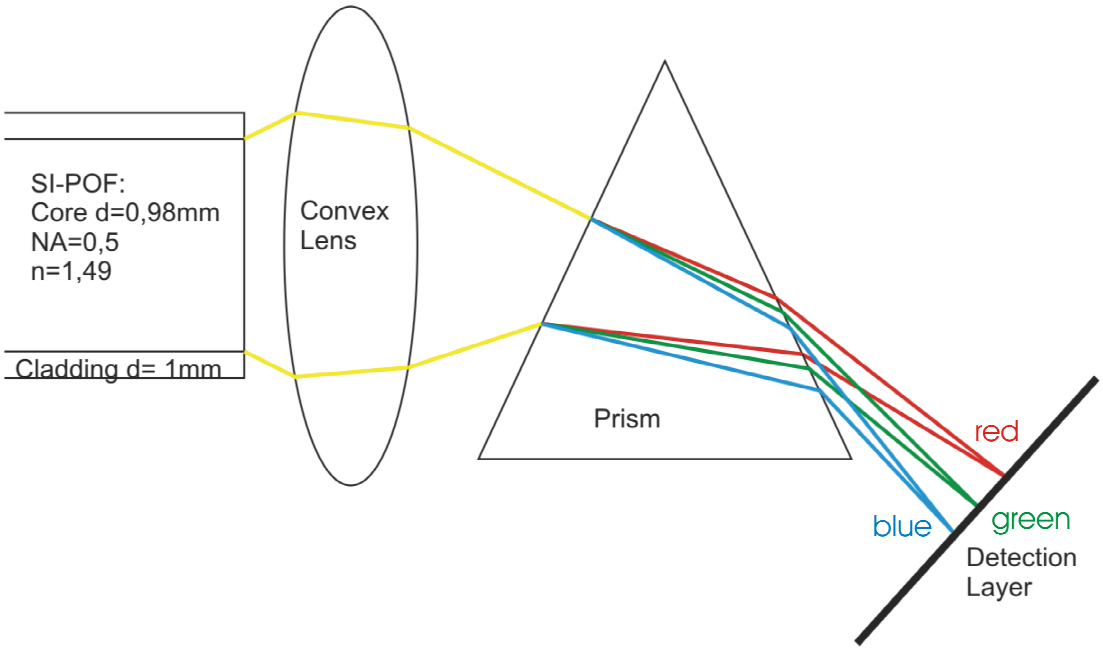

Fig. 2: Demux Proposal, principal sketch

The complete assembly is designed with the help of a computer-simulation-program. Though the program shows better results for a configuration with a concave mirror, see fig. 3. Therefore the mirror minimizes spherical and chromatic aberrations to collimate the light, because the prism shows the lowest aberrations and the best separation of the different wavelengths for collimated light. Thus, the refraction power is divided in the concave mirror and a plan-convex lens behind the prism to focus on the detection layer. The whole configuration is estimated to be smaller then 60cm^2.

The spot diagram is also shown in Fig. 3. It collects the transverse aberrations in the image plane resulting from tracing a rectangular grid of rays (emerging from a single object point) through the system. The circle shows a diameter of 10mm. Hence, the gap between the three single wavelengths is about 5mm. Thus cross-talk is absolutely negligible.

All parts of this system can be manufactured with the help of the injection moulding technique and therefore it is a very economical way to create a demuxer. This technique can be used if the optical parts become mass products.

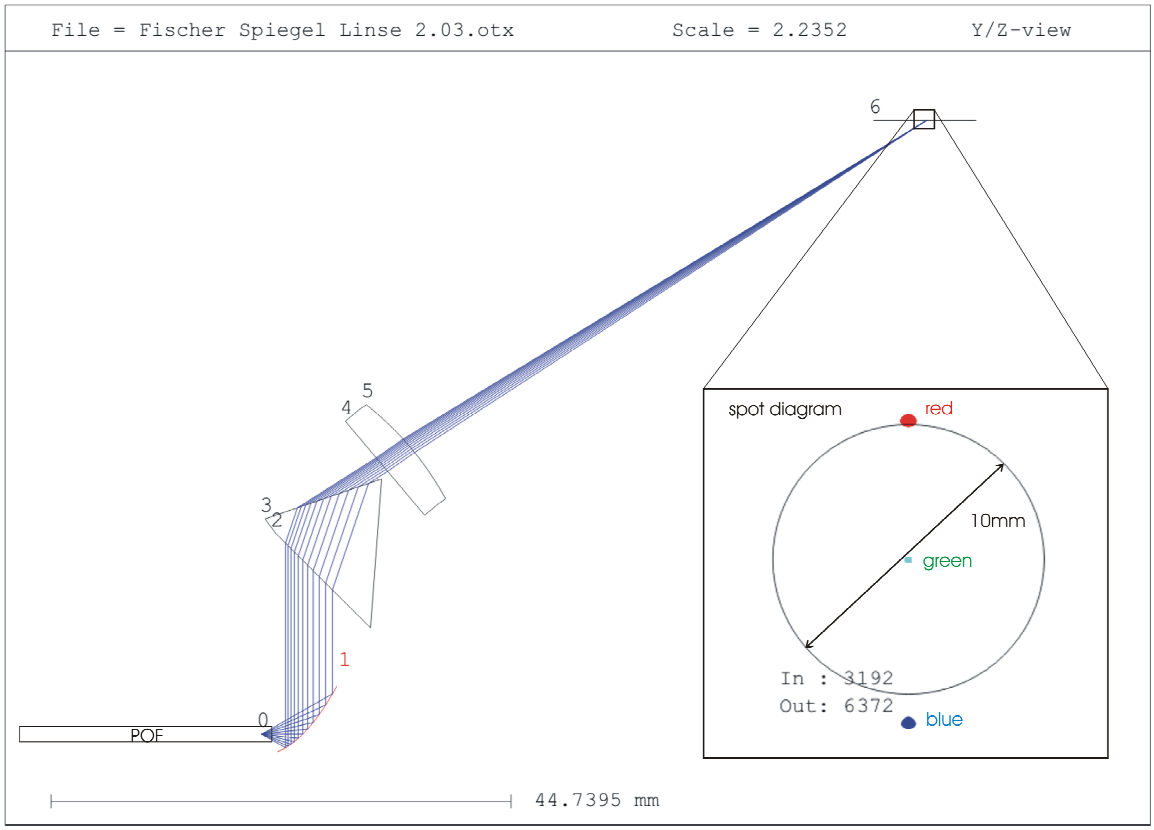

Fig. 3: 2D-Plot of computer designed Demuxer

3. Results

The first prototype produced by injection moulding technology is a simple waveguide, shown in fig. 4. This device is manufactured for first tests of the attenuation of the used materials. The core consists of PC (polycarbonate, refractive index n_{PC}=1.59) and for the cladding PMMA (polymethylmethacrylate, n_{PMMA}=1.49) is used.

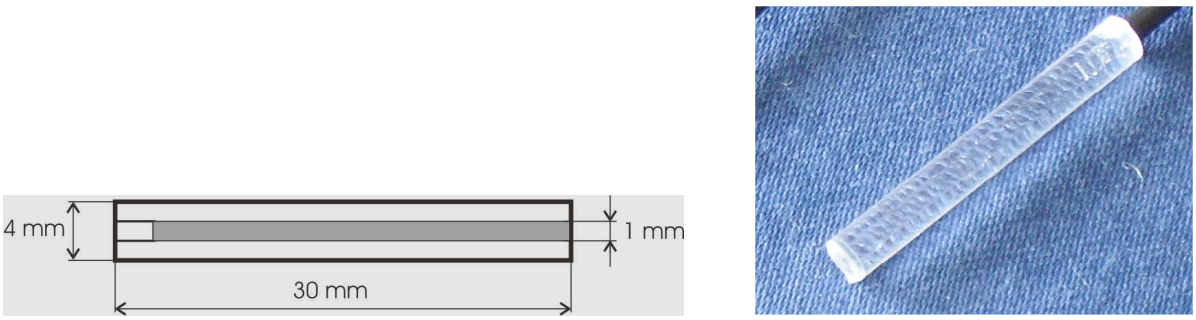

Fig. 4: Prototype of test waveguide

This prototype will be the basis for passive optical splitters/combiners. With this technology 1:4 - splitter/combiner are easy processable. The attenuation of this basic device is shown in tab. 1.

Attenuation [dB]		
@ 660nm (red)	@ 530nm (green)	@ 470nm (blue)
1,80	2,17	2,52

Tab. 1: attenuation of simple waveguide

In comparison with conventional splitters for POF applications these results are very auspicious. For the use of these devices as a 1:2 – splitter we estimate a loss of 5.3dB for 660nm. This is comprised of 1,8dB (@660nm) for the material, 3dB for splitting 1:2 and app. 0.5dB for reflections. This results in a mean attenuation of 0,7 db/cm. Fig. 5 shows the attenuation of different couplers available on the market and of our new coupler, based on the PC-POF device. It can be noticed that most of the commercial products are showing an additional excess loss of more than 5 dB in comparison to the results of the PC-POF. The new device will be excellent for increasing existing POF-systems performance.

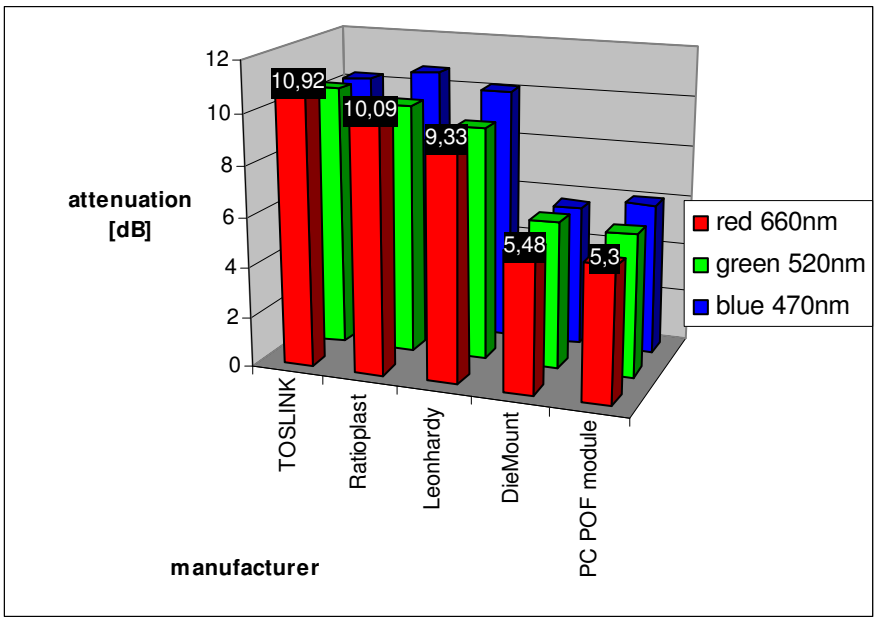

Fig. 5: comparison between different couplers

In fig. 6 a PC-POF module is shown with light coupled in. In this figure it is to be recognized, that light exits at various points because of scattering at trapped air. This results in an additional loss. To avoid this, the production process has to be improved.

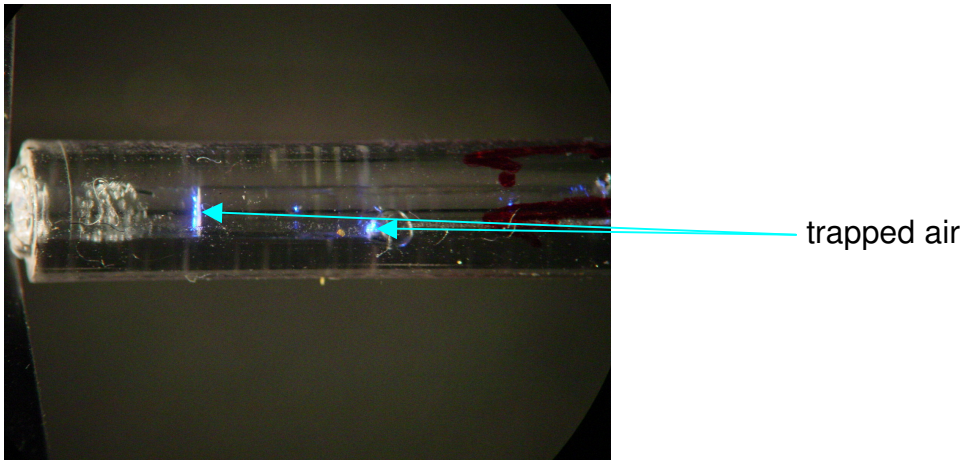

Fig. 6: PC POF module with light

4. Conclusion

The WDM technique has the potential to expand the bandwidth-length product tremendously in the visible range.

10GBit/s for in-house-networking is in the first discussion[16].This high data throughput is only viable with WDM, as the data throughput for single-mode fiber is limited by 2GBit/s. Hence, WDM over POF is “The Solution to Quality Ubiquitous and Video Home Networking” [16].

For the WDM technique are components like a demuxer of central importance. Hence, our attenuation measurements show results which are really comparable to the best at the market available splitters. However with one main difference, the demonstrated splitters can be fabricated in low cost injection moulding technology, which make these devices capable to open WDM for mass production.

5. Acknowledgement

We have to thank the Schiku & TNP GmbH Goslar for providing the moulded devices, the State of Saxony-Anhalt and especially the State Secretary of Education for the “OPTOREF” project.

6. References

1 T. Naito, ”One Terabit /s Transmission over 10.000km using C-Band and L-Band”, Networks and Optical Communications I,IOS Press, pp 2-9, (2000)

2 A. Umbach, D. Trommer, A. Siefke, and G. Unterbörsch,“50GHz Operation of Waveguide Integrated Photodiode at 1.55µm“, Proc. of the 21st ECOC, Brussels, Belgium, 17.-21. Sept. 1995, p. 1075 ff., (1995)

3 A. Umbach, D. Trommer,, and G. Unterbörsch,“High-speed, high power 1.55µm Photodetectors “, Optical and Quantum Electronics, No 33, pp 1101-1112 (2001)

4 A. Umbach, D. Trommer, D. Steingrüber, R. Seeger, A. Ebert and G. Unterbörsch,“Ultrafast, high power 1.55µm side illuminated photo detector with integrated spot size converter“, Proc. ECOC 2000,FG2-1,p 117-119, (2000)

5 U. Krüger, K. Krüger, R. Batchelor, U. H. P. Fischer, C. v. Helmolt, and U. Nagengast ,”Wavelength manager covering the EDFA band and capable of controlling hundreds of transmitters”,Proc. ECOC, Vol. 1, pp 483-486 (1994)

6 A. H. Gnauck, A. R. Chraplyvy, R. W. Tkach, J. L. Zyskind, J. W. Sulhoff, A.J. Lucero, Y. Sun, R. Mo Jopson, F. Forghieri, R. M. Deroshier, C. Wolf and A. R. McCormick, One terabit/s transmission experiment, in Proc. OFC’96, PD 20, San Jose, CA, 1996

7 C. R. Batchellor, B. T. Debney, A. M. Thorley, T. J. B. Swanenburg, G. Heydt, F. Auracher, and P. Lagasse: 'A coherent multichannel demonstrator', Electr. & Comm. Engineer. J. , 235-242 (1992)

8 [MOST] http://www.mostnet.de

9 N. Weber, “Low cost optical transmission solutions for short distances”, http://www.iis.fraunhofer.de/ec/oc/index.html

10 http://www.pofac.de/pofhaus/d/index.php

11 H. Kragl, “A product family for simplex POF home networks”, http://www.pofac.de/itg/fg_5_4_1/de/fachgruppentreffen/treffen21.php

12 C.-W. Park, “Broadband Home Network in Korea”, http://www.pofac.de/itg/fg_5_4_1/de/fachgruppentreffen/treffen21.php

13 Multiplex-Sender für Polymerfaserübertragung und Verfahren zu dessen Herstellung, 10 2005 050 747.6 (Tx) 22.10.2005,

14 Demultiplex-Empfänger für Polymerfaserübertragung und Verfahren zu dessen Herstellung, 10 2005 050 739.5 (Rx), 22.10.2005

15 Multiplex-Transceiver für Polymerfaserübertragung und Verfahren zu dessen Herstellung, 10 2006 009 365.8 (TRx)

16 ITG-FG 5.4.1 “Optische Polymerfasern”, http://www.pofac.de/itg/fg_5_4_1/de/fachgruppentreffen/treffen21.php